Cooling	
Tolerance	e8
Coating	AlphaFerro Platin X

Strategy	ETC, HPC
Application	
Features	HA, ≠, 3xD

Expert

- Optimized roughing teeth for soft cut and small chips
- Ascending reinforced tool core for maximum stability
- Variable helical pitch and unequal tooth pitch for smooth running

- For roughing, up to 2xD full slot
- For process reliable, helical immersion

- Extreme material removal at the highest performance
- Also ideally designed for trochoidal milling

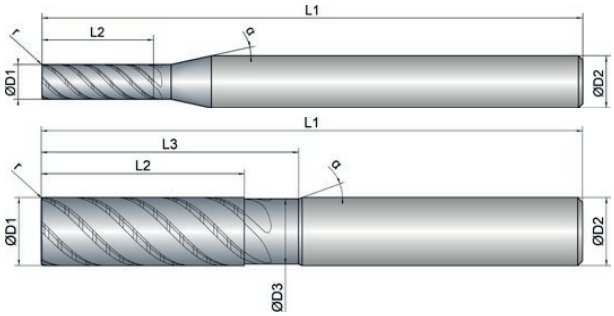

Roughing

inappropriate — optimal

Finishing

inappropriate — optimal

EXPK1-M02-0153	D1 mm ⌀	D3 mm ⌀	L2 mm	L3 mm	L1 mm	D2 mm ⌀	z #	r mm	°	α °
4	4.0	0.0	13.0	0.0	63.0	6.0	5	0.10	45	12
6	6.0	5.6	18.0	24.0	63.0	6.0	5	0.20	45	20
8	8.0	7.6	24.0	30.0	70.0	8.0	5	0.20	45	20
10	10.0	9.6	30.0	38.0	80.0	10.0	5	0.32	45	20
12	12.0	11.4	36.0	46.0	93.0	12.0	5	0.32	45	20
16	16.0	15.4	48.0	58.0	110.0	16.0	5	0.32	45	20
20	20.0	19.4	60.0	74.0	125.0	20.0	5	0.50	45	20

Download Catalog Pages (PDF)

			Dimension	Ø4		Ø6		Ø8		Ø10		Ø12		Ø16	
			Infeed in mm	ae= 1xD ap= 2xD	ae= 0.3xD ap= 2xD	ae= 1xD ap= 2xD	ae= 0.3xD ap= 2xD	ae= 1xD ap= 2xD	ae= 0.3xD ap= 2xD	ae= 1xD ap= 2xD	ae= 0.3xD ap= 2xD	ae= 1xD ap= 2xD	ae= 0.3xD ap= 2xD	ae= 1xD ap= 2xD	ae= 0.3xD ap= 2xD
			Application												
	Material	Strength (N/mm²)	Feed (mm/Z)	fz	fz	fz	fz	fz	fz	fz	fz	fz	fz	fz	fz
P			Vc (m/min)												
1.1	Steel, unalloyed	<500	205	0.015	0.022	0.025	0.035	0.035	0.05	0.055	0.075	0.06	0.085	0.065	0.09
1.2-1.5	Steel, unalloyed	<1100	170	0.012	0.02	0.022	0.032	0.032	0.048	0.05	0.07	0.055	0.08	0.06	0.085
2.1-2.2	Steel, low-alloyed	<950	160	0.012	0.02	0.022	0.032	0.032	0.048	0.05	0.07	0.055	0.08	0.06	0.085
2.3-2.4	Steel, low-alloyed	<1300	135	0.01	0.018	0.02	0.03	0.03	0.043	0.045	0.065	0.05	0.075	0.055	0.08
3.1-3.2	Steel, high-alloyed	<1100	150	0.01	0.018	0.02	0.03	0.03	0.043	0.045	0.065	0.05	0.075	0.055	0.08
3.3	Steel, high-alloyed	<1400	125	0.008	0.015	0.018	0.025	0.025	0.04	0.042	0.06	0.045	0.07	0.05	0.075
K			Vc (m/min)												
1.1-1.2	Grey cast iron	<1000	190	0.012	0.02	0.022	0.032	0.032	0.048	0.05	0.07	0.055	0.08	0.06	0.085
2.1-2.2	Modular cast iron	<850	150	0.01	0.018	0.02	0.03	0.03	0.043	0.045	0.065	0.05	0.075	0.055	0.08
3.1-3.2	Malleable cast iron	<800	135	0.01	0.018	0.02	0.03	0.03	0.043	0.045	0.065	0.05	0.075	0.055	0.08
M			Vc (m/min)												
1.1	Inox, ferritic/martensitic	<850	70		0.01		0.022		0.032		0.045		0.055		0.065
2.1	Inox, austenitic	<650	55		0.008		0.02		0.028		0.04		0.05		0.06
2.2	Inox, austenitic	<750	45		0.006		0.018		0.025		0.035		0.045		0.055
3.1	Duplex steel	<1100													

			Dimension	Ø20	
			Infeed in mm	ae= 1xD ap= 2xD	ae= 0.3xD ap= 2xD
			Application		
	Material	Strength (N/mm²)	Feed (mm/Z)	fz	fz
P			Vc (m/min)		
1.1	Steel, unalloyed	<500	205	0.075	0.11
1.2-1.5	Steel, unalloyed	<1100	170	0.07	0.1
2.1-2.2	Steel, low-alloyed	<950	160	0.07	0.1
2.3-2.4	Steel, low-alloyed	<1300	135	0.065	0.09
3.1-3.2	Steel, high-alloyed	<1100	150	0.065	0.09
3.3	Steel, high-alloyed	<1400	125	0.06	0.08
K			Vc (m/min)		
1.1-1.2	Grey cast iron	<1000	190	0.07	0.1
2.1-2.2	Modular cast iron	<850	150	0.065	0.09
3.1-3.2	Malleable cast iron	<800	135	0.065	0.09
M			Vc (m/min)		
1.1	Inox, ferritic/martensitic	<850	70		0.075
2.1	Inox, austenitic	<650	55		0.065
2.2	Inox, austenitic	<750	45		0.06
3.1	Duplex steel	<1100			

NOTE | The values marked in turquoise are side applications!